MOON (140x70)

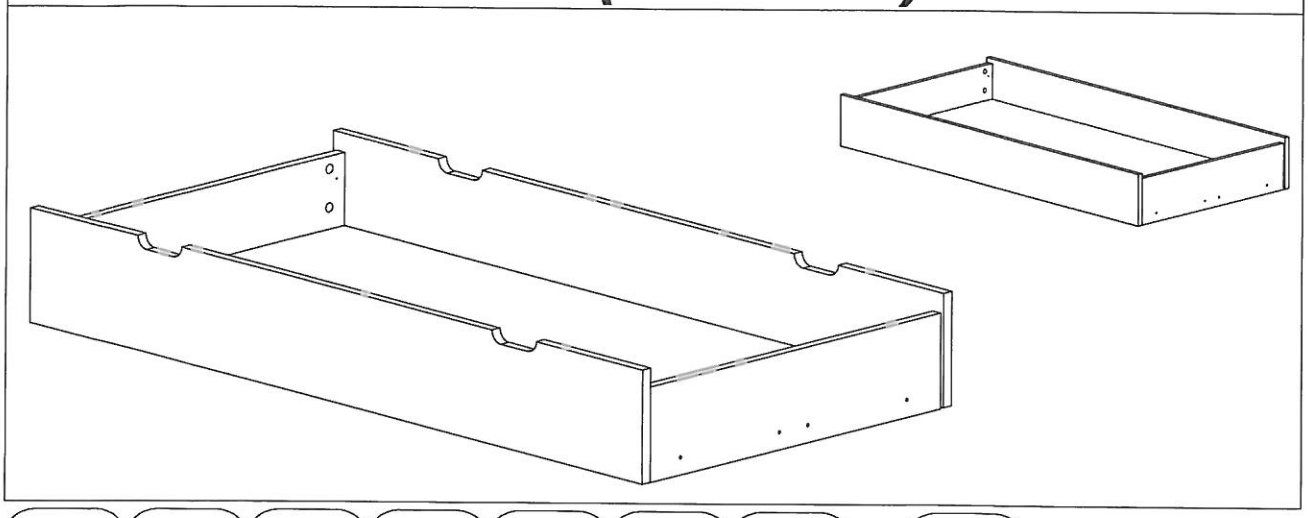

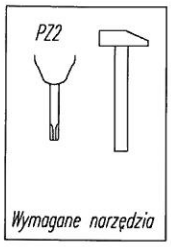

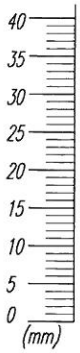

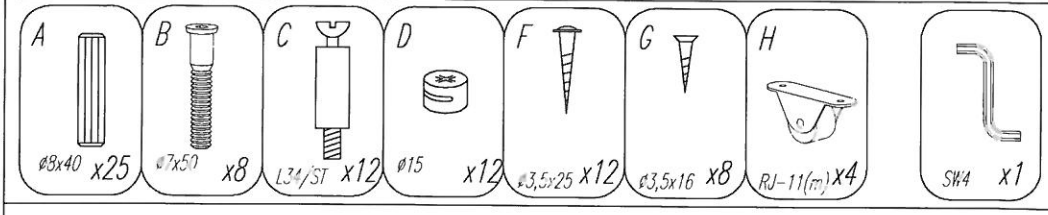

BLANCO-3_DRAWER140

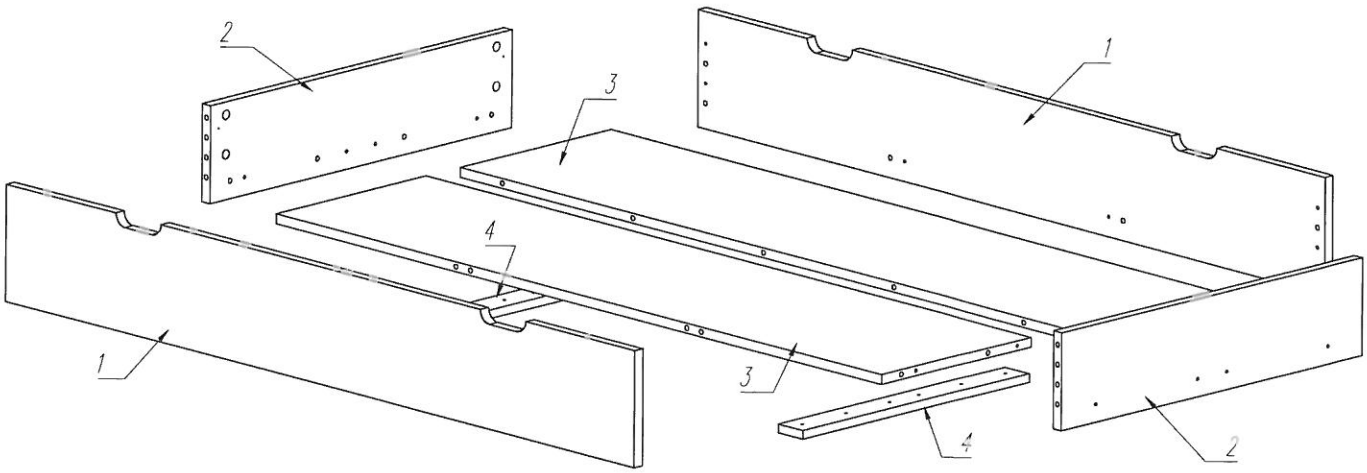

wer. 3/2017 rys. MOON-Szuflada 140_ins

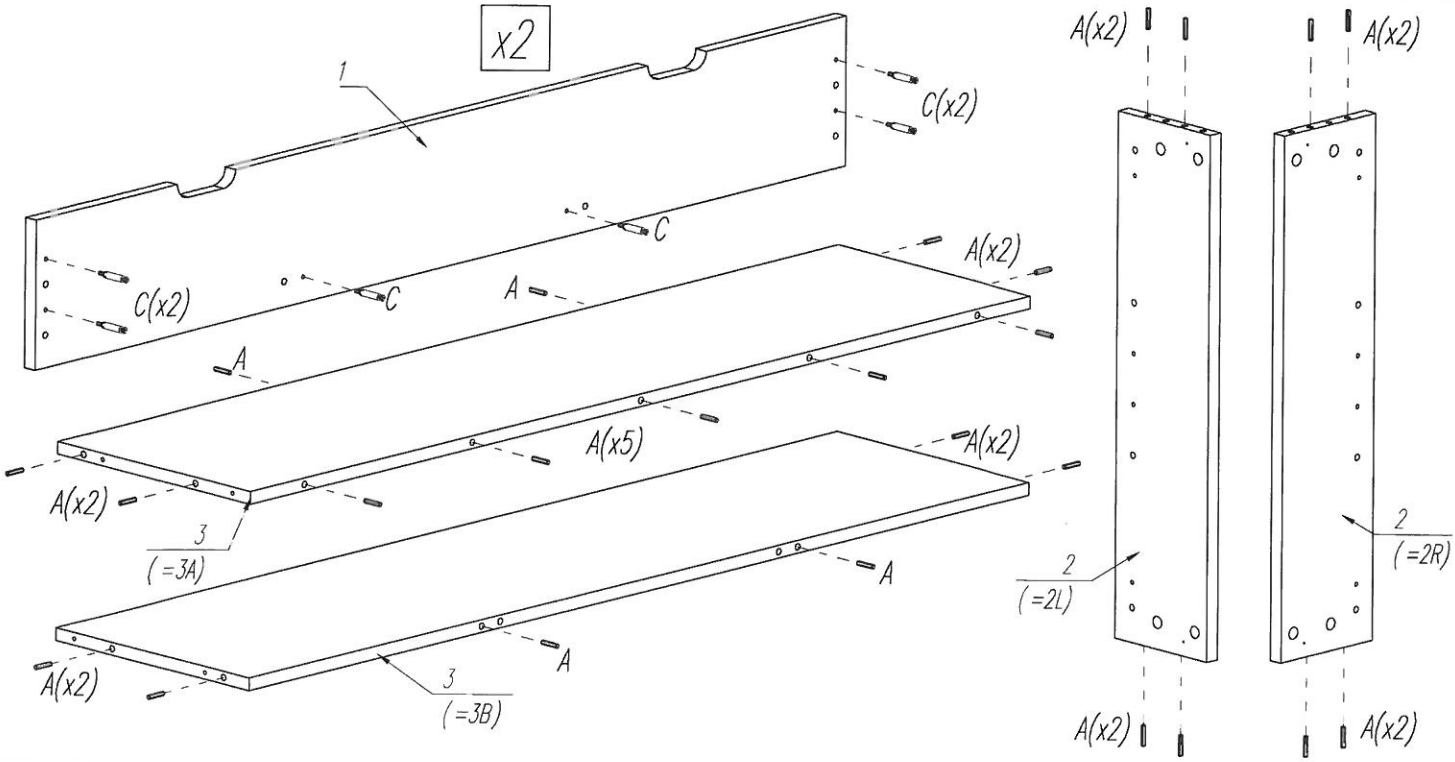

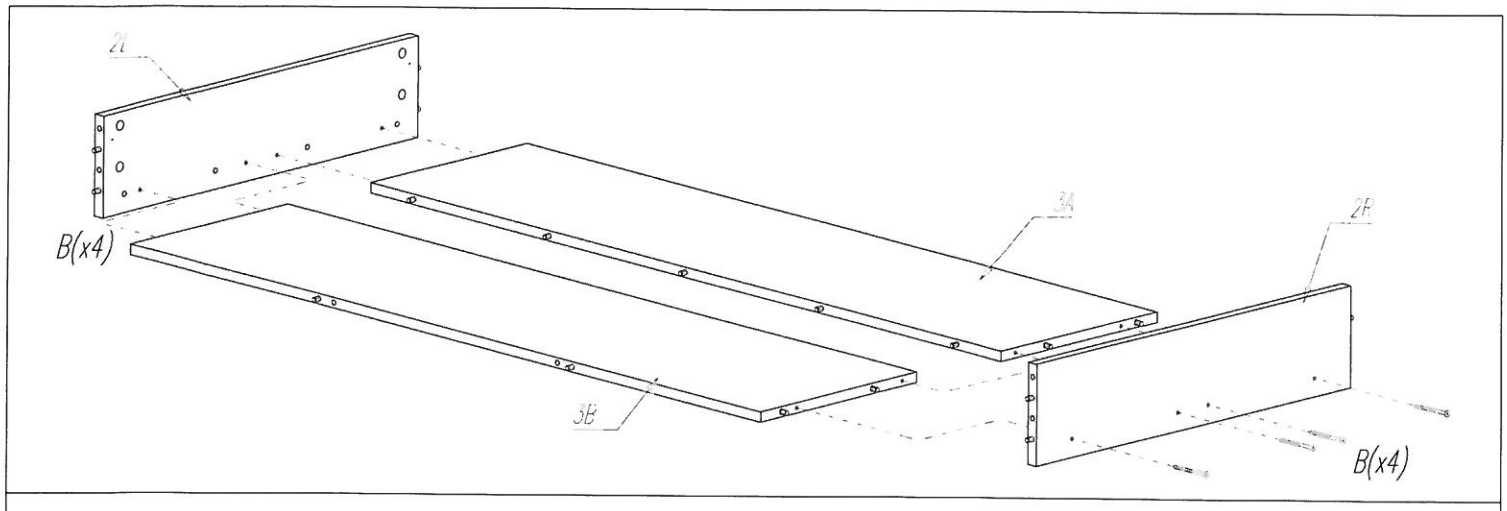
2L
B(x4)
3A
2F
3B
B(x4)

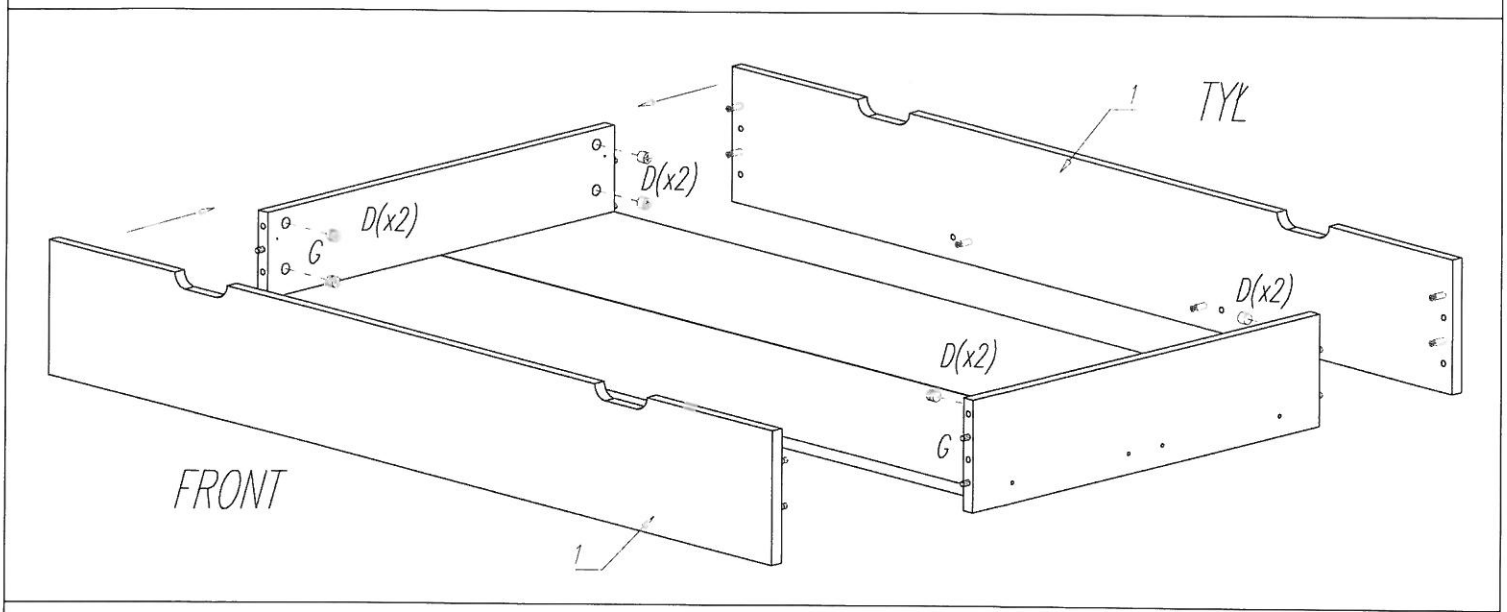
1
TYL
D(x2)
D(x2)
G
D(x2)
D(x2)
G
FRONT
1

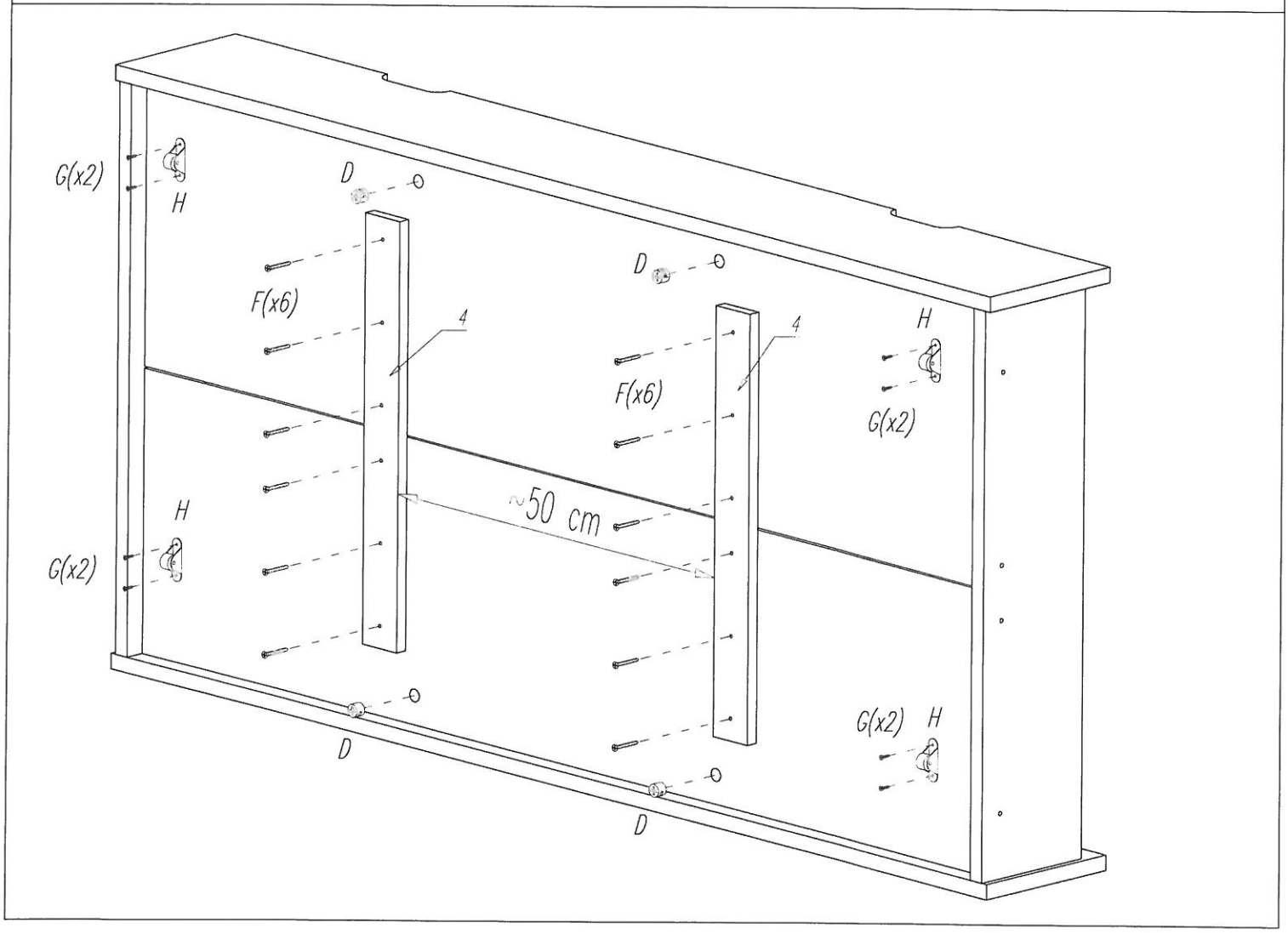
G(x2)
H
D
D
F(x6)
4
4
H
F(x6)
G(x2)
~50 cm
H
G(x2)
G(x2)
H
D
D